P60 LIMITED EDITION
P60 WF
Technical Sheet

8″ woofer

SPECIFICATIONS

Nominal power	100W	
Maximum power	200W	
Sensitivity	91dB	
Nom. impedance	4Ω	
Frequency response	35Hz-500Hz	
Cone	W	
Surround	Butyl	
VC diameter	40mm	1 5/8″
Net weight	1200g	2.65lbs
Depth	50mm	1 5/8″
Cone diameter	20cm	8″
Magnet	Neodymium	

FREQUENCY RESPONSE/IMPEDANCE

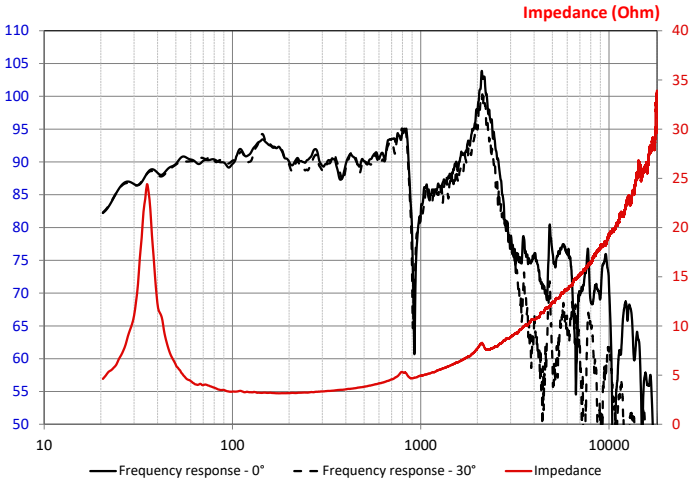

PARAMETERS

Rdc	3.06Ω	
Fs	39.5Hz	
Mms	40g	0.09lb
Cms	0.4mm/N	
Vas	41.54l	
Qts	0.871	
Qes	0.98	
Qms	7.77	
Bxl	5.57N/A	
Sd	268.8cm	105 7/8″
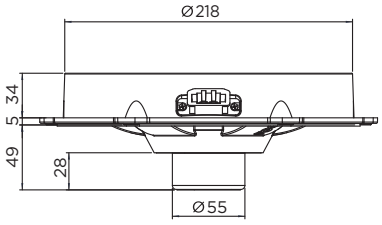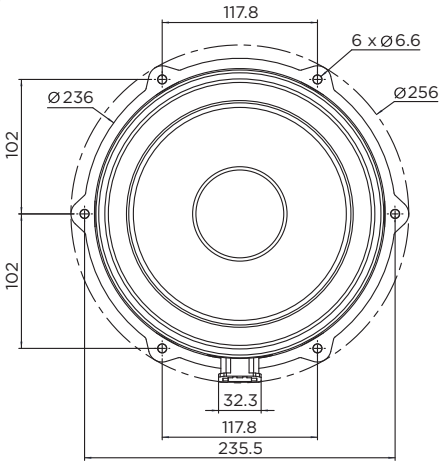
MECHANICAL DRAWING (MM)